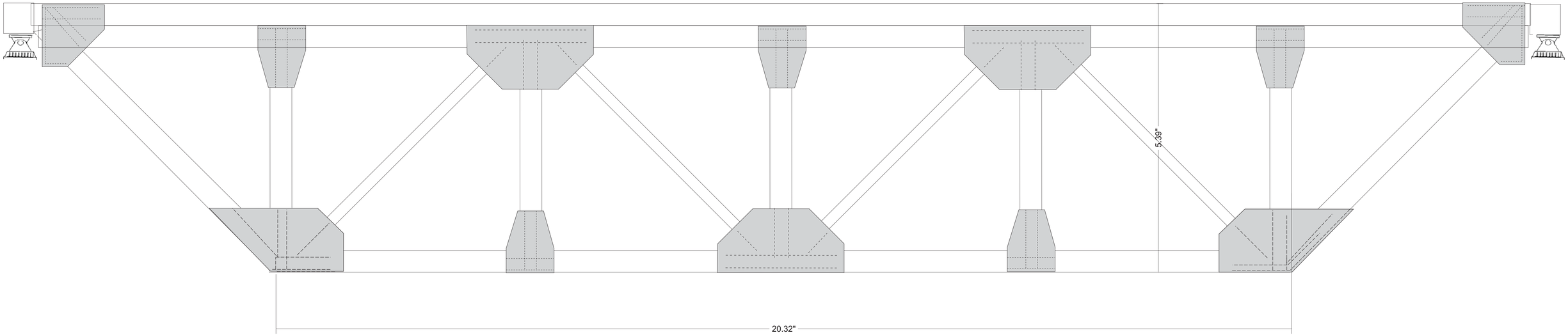
5.39"
20.32"

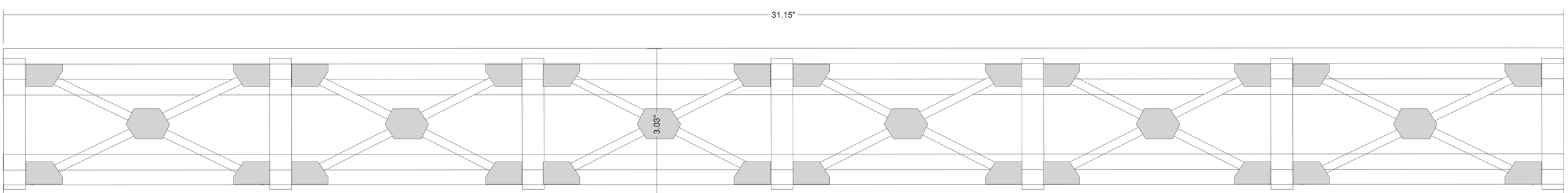
31.15"
3.03"