Lionel TPC 300/400 Failures

Track Power Controller (TPC)

Posted on July 8, 2011 by Dale Manquen

Although the Lionel TPC 300/400 design is quite robust regarding track current surges through the power-control Triac during derailments, the unit's power supply has an Achilles heel. This photo shows the damage that results from a voltage surge on the power source.

TPC circuit board

The blackened area in the center is the result of a blown input diode and Zener diode due to a surge.

The schematic below shows that the incoming power feeds through a diode directly to the Zener diode clamp. It appears that the TPC has poorly designed circuit that is apparently intended to clamp voltage transients on the input to the two cascaded regulators that provide power for the logic circuits. The circuit begins with a series diode to half-wave rectify the incoming power (nominally 18 volts AC, or 25.5 volts on the peaks of the AC waveform). This diode feeds a junction point that distributes this rectified voltage to 3 components:

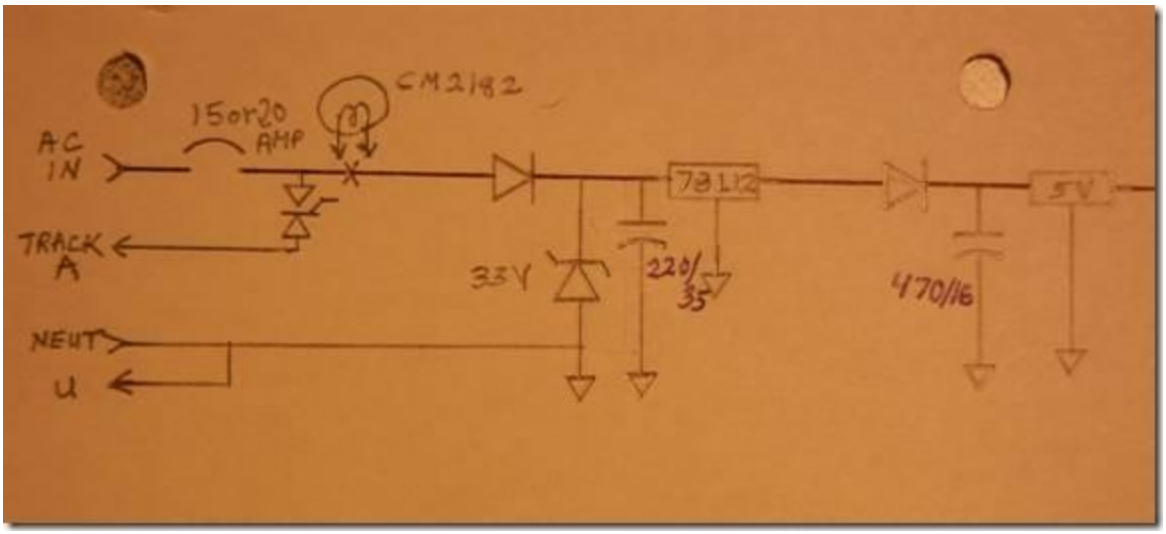

TPC Power Supply Schematic

① A 220 microfarad/35 volt energy storage capacitor to ground/common

② A 33 volt Zener diode to ground, and

③ A 78L12 low power voltage regulator.

I assume the idea was that the Zener would clamp any incoming voltage spikes to avoid overvoltage on the regulator chip and filter capacitor.

A Zener circuit normally has a resistor between the voltage source and the Zener, with the resistor serving as a ‘rubber band’ that takes up any overvoltage as a voltage drop across the resistor. The Zener operates at a desired fixed voltage, and any ‘extra’ voltage from the source drops across the resistor on the way to the Zener.

The TPC lacks the series resistor, which makes the Zener a suicide device. All of the extra voltage appears across the Zener, and this results in a very rapid increase of current for a small overvoltage. The Zener tries to dissipate the resulting extra power as heat, but if the voltage surge is big enough, the Zener overheats catastrophically and shorts or explodes. If the Zener shorts, the input diode now carries excessive current and it shorts or explodes. The extra heat can seriously char the circuit board under the overheated components.

Why do we get an overvoltage surge? If there is a derailment that shorts the track, the power transformer will put out a very high short-circuit current. The slow thermal protection devices (fuses and circuit breakers) don’t react instantly, and the current may be several times the expected maximum based upon the rating of the protection device. (The TPC has slow thermal breakers rated at 15 amps for the TPC 300 and 20 amps for the TPC 400.) This extra energy builds up a stronger-than-normal magnetic field in the transformer. When the fault/short clears, either by the derailed wheels bouncing away from a shorting position or maybe by blowing a fuse or breaker downstream of the TPC, the current stops abruptly.

When the current drops off rapidly, the extra-strong magnetic field in the transformer must collapse quickly. This rapid collapse can generate output voltage spikes that are several times the normal operating voltage. For a big transformer, there is enough energy stored in this collapsing field to actually toast downstream devices. Our poor little Zener, with no rubber band to help it, blows up. RIP, noble Zener. You never stood a chance!

And if just one spike isn't enough to vaporize the Zener, imagine a derailed wheel dragging along the track, creating a rapid series of shorts, each one followed by a voltage spike. Each spike dumps heat into the Zener, pumping up the Zener's temperature until it dies.

Using a bigger diode and Zener would be a step in the right direction, but even that doesn't solve the basic problem that there is no resistance in this input path. The problem can be minimized by inserting a series resistor or fast 'instrument' fuse in series with the voltage feed to the Zener. This way we have a rubber band to either stretch or break without damaging the Zener. A fuse inside the TPC would be a major inconvenience, which leaves us with using a series resistor

One complication of adding a series resistor to the existing circuit is that the amount of current through the series diode and regulator varies quite a bit, depending upon the state of the TPC. Under idle conditions with all LEDs off, the current is about 11 mA, but this increases to as much as 30 mA when the COM LED is flashing and the TRACK LED is at full brilliance. (There is also a third LED in an optocoupler that mimics the TRACK LED.

Adding a resistance in series with the series half-wave rectifying diode is a bit tricky since the half-wave charging current to the filter capacitor has a peaked waveform. The 11-30 mA average is actually a shorter, higher pulse that causes quite a bit of voltage drop across any series resistance inserted into the circuit. This can cause problems if the AC source drops much below the nominal 18V level.

My first experiment was with a series resistor of about 200 ohms. I didn't like the amount of fixed drop, which limited the minimum input voltage. I would like everything to run well from 15 VAC, but the 200 ohm resistor dropped up to 200 x .03 = 6 volts, too much for feeding the 12 volt regulator's input.

My second try was to replace the series resistor with a light bulb. I wanted low series resistance for moderate loads, but a higher resistance when there is a fault condition with high currents going into the Zener. I tried a 14V #330 midget flanged bulb, and a similar #327 28V bulb. The 327 has too much resistance to work well, but the 330 operates nicely, just glowing orange. Comparing the #330 bulb's V-I curve with a 200 ohm resistor shows that the bulb has about 3V less drop at about 20 mA, but the incremental slope is still about 200 ohms. At full rated voltage, the incremental slope is about 300 ohms.

During testing I wasn't satisfied with the minimum voltage required using the #330 bulb. I decided to minimize the peak current requirement by reducing the current to the COM and TRACK LEDs. I had used similar LEDs with only 4 mA of operating current in an audio product I helped design, compared to the 7-8 mA in the TPC, and that led me to think that reducing the LED current would not cause a significant loss in brightness. I doubled the LED

series resistance from 390 ohms to twice that value by adding an extra 390 ohm 1/4 watt resistor at each LED to one of the LED leads. This cut the maximum current to just over 20 mA. With the bulb and these resistors, everything runs fine at less than 15 volts.

Although the #330 is rated at 14V, it should sustain spikes of up to 20 volts without damage, which would be about a 54V input spike. Under normal voltage conditions the bulb should last forever at a dim glow.

The advantage of this circuit is that the peak current for a short 40V spike would be only 60 mA, compared to 6 A without any series resistance. If the spike persists, the bulb filament would get brighter, raising the bulb's resistance and dropping the current below 50 mA. This would limit dissipation in the Zener to about .05 *33 or 1.65 watts. A 50V spike would cause a current of about 85 mA once the bulb warms up. Considering that the Zener heating is proportional to I^2, we are talking MAJOR improvements of about 1000:1 compared to the original circuit.

This series resistor modification has been successfully installed in a few TPCs that blew their power supplies. The upgrade also includes replacing the blown diode and Zener with higher powered devices. The repaired/upgraded units have been in operation for several years.

Adding a robust Transient Voltage Suppressor across the power source would also help to snub any voltage spikes.

I originally offered a kit with the upgrade parts, but I do not feel comfortable asking folks to replace surface mount components, drill new holes and cut traces. I do still offer repair services for blown TPCs.